EXERGY ANALYSIS OF COMBUSTION SYSTEMS

Nico Woudstra, Teus van der Stelt
Delft University of Technology
Energy Technology, Process & Energy Department
Leeghwaterstraat 4, 2628 CA Delft
The Netherlands
Phone: +31 15 278 2178 Fax: +31 15 278 2460
E-mail: n.woudstra@tudelft.nl

ABSTRACT

From second law evaluations (entropy or exergy evaluations) it is generally known that thermodynamic losses of boilers and furnaces are much higher than the thermal efficiencies do suggest. With thermal losses of around 5 % the thermodynamic losses (exergy losses) of a boiler can be 50 % or more. The combustion process is responsible for a significant part of these losses. Various atmospheric combustion processes are investigated in order to obtain a better insight in the effect of the main design parameters like the applied fuel, its composition and moisture content, the air factor and the air preheat temperature. Therefore a series of system calculations with natural gas, hard coal and wood as fuel have been made. Value diagrams have been derived to visualise the exergy loss of combustion and to explain their cause. For the investigations the computer program Cycle-Tempo has been used to perform the necessary system calculations, to draw value diagrams and to analyse the results. It appears that the type of fuel and the extent of air preheat mainly determine the exergy loss of combustion. Preheating of combustion air can reduce the exergy losses of combustion considerably. But even with air preheat temperatures up to 1000 ˚C exergy losses of combustion are still high.
Keywords: atmospheric combustion, biomass, coal, natural gas, Cycle Tempo, exergy analysis, exergy efficiencies, value diagrams.

NOMENCLATURE

ex_F	specific exergy fuel [kJ/kg]
Ex	exergy [kJ]
LHV_F	lower heating value fuel [kJ/kg]
Q	heat [kJ]
T	temperature [K]
T_0	environmental temperature [K]
W	power [kJ]

INTRODUCTION

The production of power and heat in industrialised countries is almost entirely based on the combustion of fuels. Usually combustion takes place in boilers or furnaces; well designed boilers have high thermal efficiencies of more than 90 %. Even very high efficiencies, close to 100 %, can be achieved depending on the applied fuel and boiler type. These high thermal efficiencies do suggest that combustion processes are highly optimised and do not need further improvement with regard to their thermodynamic performance. Second law (entropy or exergy) evaluations however show that thermodynamic losses of boilers and furnaces are much lager than the thermal efficiencies do suggest. With thermal losses of around 5 % the thermodynamic losses still can be in the order of 30 %. These high thermodynamic losses (exergy losses) are mainly caused by the combustion process as can be demonstrated by the value diagram in Figure 1; the shaded areas represent the thermodynamic losses. The backgrounds of the value diagram are explained in [1].

Because of availability and costs air is usually applied for the combustion of fuels. In case of fossil fuels adiabatic combustion temperatures are around 2000 ˚C. Heat can be made available by cooling down the flue gas from this temperature

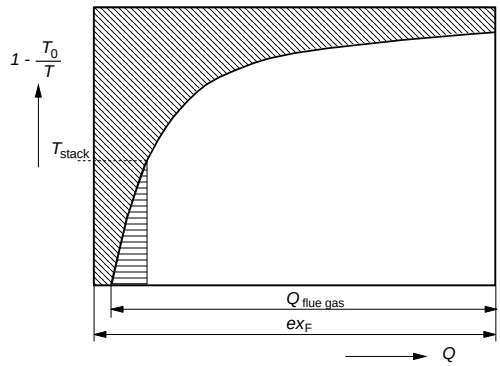

Figure 1 Value diagram of adiabatic combustion of a fuel

to ambient temperature. The resulting temperature curve is shown in Figure 1; the area below this curve equals the exergy of the heat transferred from the flue gas. As the total area of this diagram equals the exergy of the fuel, the slantly shaded area represents the exergy loss of combustion. In a boiler however flue gas is not cooled down to ambient temperature, but leaves the boiler at the "stack temperature" (see Figure 1). The residual heat from the flue gas is also lost; in Figure 1 the horizontal shaded area equals the corresponding exergy loss. From the value diagram it will be clear that the rather low combustion temperature and the need for cooling down the flue gas in order to extract the required heat, are the main causes of the large exergy losses. The thermodynamic average temperature of heat transfer from the flue gas is around 1000 ˚C. The adiabatic combustion temperature and thus also the thermodynamic efficiency can be raised seriously by using oxygen instead of air to oxidise the fuel. However in general this option is not feasible because of thermodynamic losses and high costs of oxygen separation plants. When using air, the adiabatic combustion temperature depends only on the properties of fuel and air. The determining parameters are the fuel type, their composition and moisture content, the air temperature and air factor at combustor inlet. Reducing the thermodynamic losses of combustion in atmospheric combustion systems will not automatically result in higher overall plant efficiencies. In case of power production, heat must be transferred to a power cycle. When the thermodynamic average temperature, at which heat transfer to the power cycle takes place, remains unchanged, reducing the thermodynamic losses of combustion will primarily increase the thermodynamic loss of heat transfer from flue gas to the power cycle. Therefore measures to decrease the thermodynamic losses of combustion are useful only if they are accompanied with improved conditions of the heat absorbing processes.

PRELIMINARY CONSIDERATIONS

In actual combustion plants it must be assured that 100 % fuel conversion will take place. To enable complete conversion within a limited time the amount of air should be higher than the stoichiometric quantity. However the air factor, the ratio between the actual air quantity divided by the stoichiometric quantity, should be as low as possible since the excess air reduces the adiabatic combustion temperature and consequently the thermodynamic average temperature of heat transfer. The actual air factor depends on the type of fuel as well as the design of the combustion plant. Solid fuels will require higher air factors than gaseous fuels. The required air factor is further depending on combustion temperature, residence

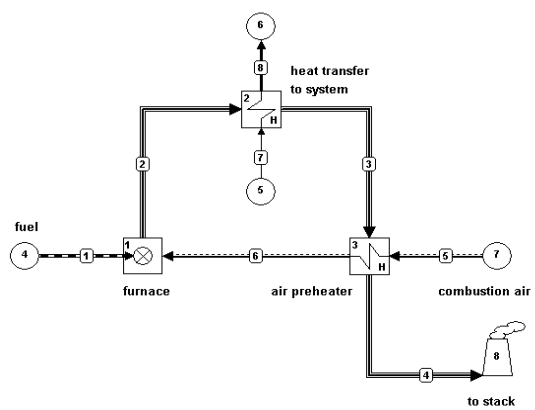

Figure 2 Combustion system with air preheat

time of the reactants in the combustion chamber or furnace and the way of mixing, the turbulence, of fuel and air flows. An air factor of 1.05 and 1.10 is sufficient for gaseous fuels, while solid fuels will require air factors of 1.10 to 1.20.

Air preheating makes it possible to increase the temperature of combustion and consequently the thermodynamic average temperature of heat transfer

will be increased. Assuming a combustion system as shown in Figure 2, air is preheated before it is supplied to the combustion chamber. Hot flue gas is passed to the heat transfer system to supply heat to a power cycle or other processes after adiabatic combustion. The flue gas is further cooled down in the air preheater and finally discharged to the stack.

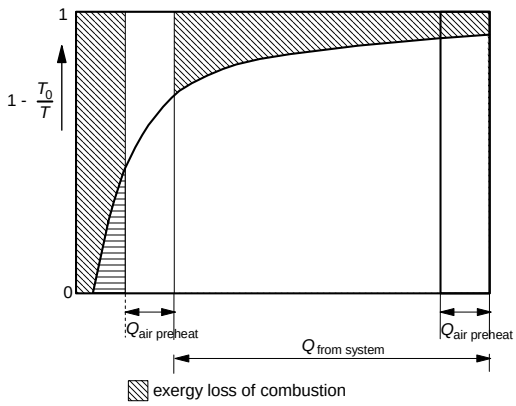

Figure 3 Value diagram of a combustion system with air preheat

The resulting cooling curve of the flue gas is shown in the value diagram of Figure 3. In this diagram it is supposed that heat transfer in the preheater can occur without temperature difference between air and flue gas; this is of course unrealistic but simplifies the explanation of the effect. The available heat from the flue gas equals the sum of the heating value of the fuel and the heat of the preheated air. Therefore the value diagram of Figure 3 can be obtained by extending the horizontal axis of the value diagram of combustion without reheat (see Figure 1) with the heat from the preheated air and extrapolating the flue gas temperature curve to the point of elevated combustion temperature. The exergy loss of combustion with air preheat is represented by the slantly shaded area in Figure 3. Heat transfer in the air preheater occurs between two flows within the system. By removing the air preheater from the diagram of Figure 3 the value diagram as shown in Figure 4 is obtained. From this diagram it will be clear that air preheat reduces the exergy loss of combustion. The difference in exergy loss between the system with reheat and the system without reheat is also shown in Figure 5.
In actual systems heat transfer in the preheater will require a substantial temperature difference

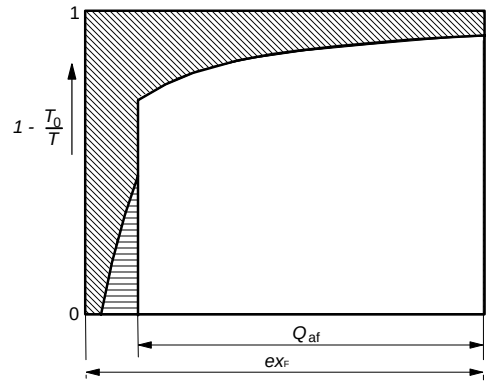

Figure 4 Value diagram of a combustion system with air preheat
(after removal of the air preheater)

between air and flue gas. And thus the exergy loss of the preheater will not be negligible. In Figure 5 the temperature curve of the heated air and thus also the additional exergy loss of the air preheater is included. The balance of the exergy loss reduction of combustion and the additional exergy loss of the air preheater determines the overall effects of air preheat.

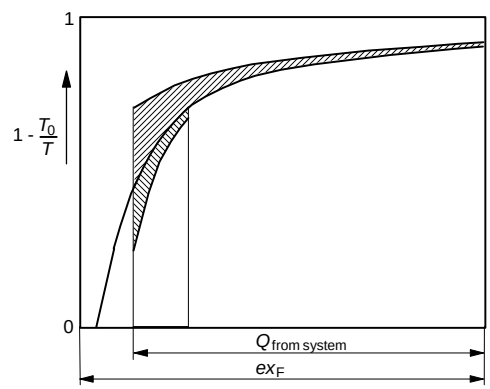

Figure 5 Value diagram with exergy loss reduction due to air preheat and
additional exergy loss of the preheater

SYSTEM EVALUATION

For evaluating various combustion options three system models are specified, that are applied to calculate system performance with Cycle-Tempo, a computer program for the evaluation and optimisation of energy systems. Since understanding of the effect of design parameters on the combustion process is the main objective of this evaluation, technical limitations are sometimes ignored. The first system model is a simple combustion system without air preheat as shown in Figure 6.

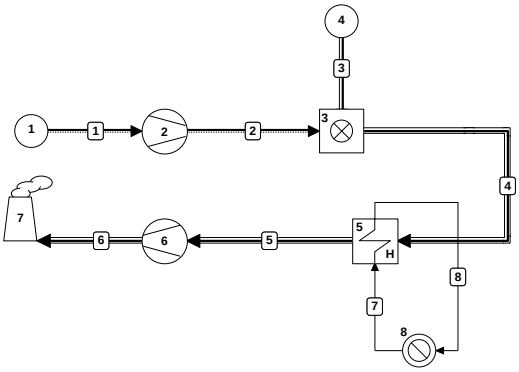

Figure 6 Combustion system without air preheat

An air blower (nr.2) passes the air to the combustion chamber (nr.3). The combustion chamber is assumed to be adiabatic; then the flue gas leaves the combustion chamber at high temperature. Hot flue gas is cooled from adiabatic combustion temperature to 100 ˚C in heat exchanger (nr.5) and discharged to the atmosphere via the stack (nr.7) by the forced draft fan (nr.6). Thus the flue gas temperature at the inlet of the forced draft fan is 100 ˚C; this temperature is applied for all system alternatives disregarding the type of fuel. This enables a useful comparison of the performance of the

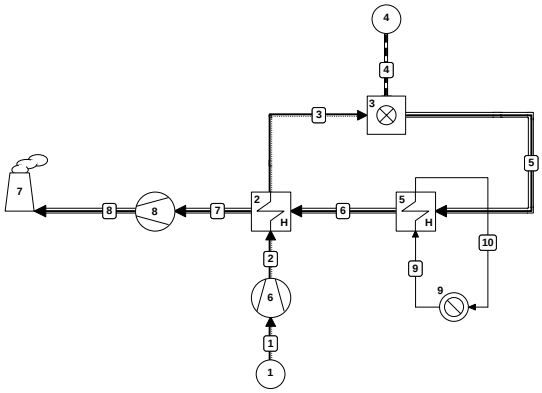

Figure 7 Combustion system with air preheat

system alternatives. As the utilisation of the heat transferred in heat exchanger (nr.5) is beyond the scope of this evaluation, this part of the system is only specified to remove the transferred heat. The second system model represents a combustion system with air preheat and is shown in Figure 7. The only difference with the first model (without air preheat) is the air preheater (nr.2). Heat is transferred in the air preheater from the flue gas flow to the air flow. As the flue gas flow is stronger than the air flow, the temperature difference between flue gas and air will become smaller when increasing the air temperature. The minimum allowable temperature difference is set at 40 K. With this temperature difference at the hot side of the preheater the maximum air preheat temperature is applied. The highest air temperature that can be obtained depends on the type of fuel as well as the air factor. To allow for higher air preheating temperatures the flue gas flow must be splitted so that the flow that passes the air preheater is just sufficient to deliver the necessary heat for preheating the combustion air. The remainder of the

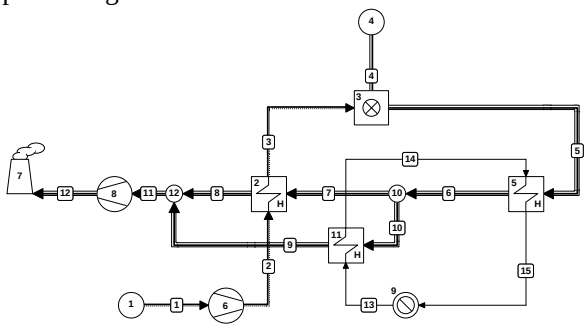

Figure 8 Combustion system with splitted flue gas flow for air preheat

flue gas flow can be cooled in another heat exchanger (nr. 11 in Figure 8), where heat is transferred to a power cycle or other heat absorbing processes. In theory any desired air temperature can be obtained by this system. Without considering limitations with respect to the technical feasibility of these systems it is assumed that air temperatures up to 1000 ˚C can be achieved. For all air temperatures the temperature difference between the flows at the hot side of the air preheater is set at 40 K. To evaluate the effect of the type of fuel three fuels are considered: natural gas, hard coal and biomass (wood). The composition of Slochteren gas has been chosen for the natural gas. The composition of the fuels (ultimate analysis for the solid fuels) as fed to the combustor is shown in Table 1. Also the lower heating value (LHV_F) and the exergy (ex_F) of the fuel are given. Estimated exergy values of the solid fuels are based on [2]. Also the composition of the environment chosen for determining exergy values is based on this reference. For the evaluation complete combustion is assumed for all considered air factors; also the stack temperature is supposed to be the same for all alternatives.

natural gas		solid fuels		
comp.	mol.fract.	elem.+ comp.	mass fractions coal	wood
CH_4	0.8129	C	0.5990	0.4496
C_2H_6	0.0287	H_2	0.0534	0.0475
C_3H_8	0.0038	N_2	0.0115	0.0148
C_4H_{10}	0.0015	O_2	0.1694	0.2361
C_5H_{12}	0.0004	S	0.0135	0.0011
C_6H_{14}	0.0005	Cl_2	0.0030	-
N_2	0.1432	F_2	0.0002	-
O_2	0.0001	H_2O	-	0.2000
CO_2	0.0089	ash	0.1500	0.0509
total	1.0000		1.0000	1.0000
LHV_F (MJ/kg)	38.00		24.61	16.01
ex_F (MJ/kg)	39.39		26.47	18.06

Table 1 Composition of applied fuels

DESCRIPTION REFERENCE CASE

In order to explain the quantities that will be used to describe the effect of the combustion parameters a description of a reference system, with air preheat, is presented first. The results for the reference case are presented in table 2. Natural gas is chosen as the fuel for the reference case. With an air factor of 1.05 and a temperature difference of 40 K between flue gas and air at the high temperature side of the air preheater an air

	units	natural gas
air factor	-	1.05
temp. combustion air	˚C	279
adiabatic comb. temp.	˚C	2106
system exergy efficiency	%	72.80
exergy losses		
combustor	%	23.14
air preheater	%	1.01
stack	%	3.34

Table 2 Combustion of natural gas; reference case

temperature of 279 ˚C is obtained, resulting in an adiabatic combustion temperature of 2106 ˚C. The system performance, indicated with the system exergy efficiency, is defined as the exergy of the heat transferred from the flue gas in heat exchanger 5 (see Figure 7) divided by the exergy of the supplied fuel. Exergy losses are presented for the combustor, air preheater and stack. In addition to the exergy of the fuel, the electric motor driven air blower and forced draft fan also supply exergy to the system. For the reference case the electrical input of the motors is 0.35 % of the fuel exergy. Therefore the total exergy loss of combustor, air preheater and stack is a little bit higher than the apparent loss resulting from the system exergy efficiency.

The value diagram of the reference case is shown in Figure 9. The diagram differs slightly from the diagrams discussed previously as the length of the horizontal axis does not equal the exergy of the fuel but the quantity of heat transferred from the flue gas by cooling the flue gas from adiabatic combustion temperature till ambient temperature. As not all

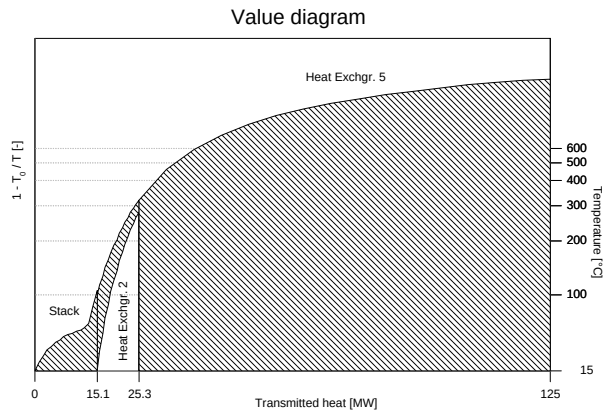

Figure 9 Value diagram of the reference case

water vapour is condensed at ambient temperature, this quantity is somewhat less than the higher heating value of the fuel. The shaded area below the right part of the temperature curve, indicated as Heat Exchgr. 5, represents the exergy of the heat transferred from the flue gas in heat exchanger nr.5. The remaining shaded areas represent the exergy losses in preheater and stack. The sudden change in slope of the temperature curve in the "Stack" is caused by condensing water vapour. Cooling the flue gas from stack temperature down to ambient temperature occurs after the gas has left the stack of course, but the losses are generally indicated as “stack loss”. The figure illustrates that the water content of the flue gas seriously affects these stack losses.

EFFECT OF THE TYPE OF FUEL

Table 3 shows the results for the combustion of different fuels assuming an air factor of 1.10 and combustion without air preheat. Thus air is supplied to the combustor at ambient temperature (=15 ˚C). Under these circumstances, when firing natural gas,

combustion temperature and system exergy efficiency are much lower than for the reference case: the adiabatic combustion temperature is reduced from 2106 to 1874 ˚C and the system exergy efficiency from 72.80 to 67.74.
Table 3 shows that differences between natural gas and hard coal are limited. Since coal requires less oxygen per kilogram fuel than natural gas, the adiabatic combustion temperature is 28 K higher. However the system exergy efficiency appears to be 1.71 % lower. The lower system efficiency is mainly caused by the higher combustor losses as a consequence of the larger difference between fuel exergy and LHV_F.

	units	nat.gas	coal	wood
air factor	-	1.10	1.10	1.10
comb. air temp.	˚C	15	15	15
adiab. comb. temp.	˚C	1874	1902	1682
system exergy eff.	%	67.74	66.03	60.52
exergy losses:				
combustor	%	29.40	30.66	35.46
stack	%	3.26	3.51	4.25

Table 3 Combustion of different types of fuel; without air preheat

Combustion of wood results in a lower combustion temperature as well as a lower system exergy efficiency; the system exergy efficiency for wood appears to be 7.22 % lower than for natural gas and 5.51 % lower than for hard coal.

EFFECT OF AIR FACTOR

The highest adiabatic combustion temperature is obtained when fuel and air are supplied to the combustor at their stoichiometric ratio. In actual combustion systems excess air is always necessary to achieve 100 % combustion of the fuel. For gaseous fuels air factors below 1.10 are usual while solid fuels in general require higher air factors. Increasing the air factor will dilute the stoichiometric flue gas mixture with non-reacting gases thus reducing the adiabatic combustion temperature. This will decrease also the system exergy efficiency as can be seen in Figure 10. In this figure the effect of the air factor on system exergy efficiencies is shown for systems without air preheat. The combined effect of the air factor and air preheat will be discussed in the following section. From Figure 10 it may be concluded that increasing the air factor will cause a slight decrease of system exergy efficiency. Raising the air factor from 1.05 to 1.20 causes a decrease in system exergy efficiency of 1.80 % in case of natural gas, 1.67 % in case of hard coal and 1.61 % in case of wood combustion.

EFFECT OF PREHEATING AIR

The advantages of air preheat have been demonstrated before. In this section these advantages will be quantified and discussed into more detail. Table 4 shows the effect of air preheat

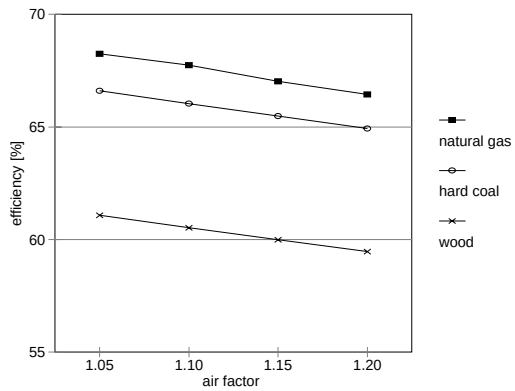

Figure 10 System exergy efficiencies versus air factor; without air preheat

in case of natural gas combustion. It is assumed that the entire flue gas flow is cooled down in the air preheater. The combustion air temperature is limited because of the differences in strength between air and flue gas flows. The presented combustion air temperature is the maximum temperature that can be obtained by assuming a temperature difference of 40 K between the flows at the hot side of the air

	units	natural gas			
air factor	-	1.05	1.10	1.15	1.20
comb. air temp.	˚C	279	288	298	307
adiab. comb. temp.	˚C	2106	2050	1998	1950
system exergy eff.	%	72.80	72.48	72.21	71.92
exergy losses					
combustor	%	23.14	23.46	23.74	24.00
preheater	%	1.01	1.09	1.16	1.23
stack	%	3.34	3.28	3.23	3.18

Table 4 Combustion of natural gas; air preheat with full flue gas flow

preheater. Higher air factors allow for higher combustion air temperatures, but the adiabatic combustion however decreases. Apparently the effect of increased excess air overcompensates the effect of higher air preheating temperatures.

A comparison of system exergy efficiencies for combustion systems with and without air preheat is presented in table 5. It appears that air preheat results in a substantial increase, around 5 %, of system exergy efficiencies. As the air mass flow increases, as in case of higher air factors, the effect of air preheat becomes more significant as can be seen from table 5. But in any case higher air factors reduce system exergy efficiencies.

	units	natural gas			
air factor	-	1.05	1.10	1.15	1.20
system exergy eff.					
- with air preheat	%	72.80	72.48	72.21	71.92
- without preheat	%	68.24	67.74	67.02	66.44
difference	%	4.56	4.74	5.19	5.48

Table 5 Comparison of natural gas cases with and without air preheat; air preheat with full flue gas flow

Figure 11 shows system exergy efficiencies as a function of the air factor. Air is preheated here with the full flue gas flow. The efficiency decrease appears to be almost similar for all fuels. In particular in case of wood combustion, efficiencies are much lower but the efficiency drop due to increasing the air factor is almost the same. Differences between combustion of hard coal and natural gas are much smaller than between wood and natural gas.

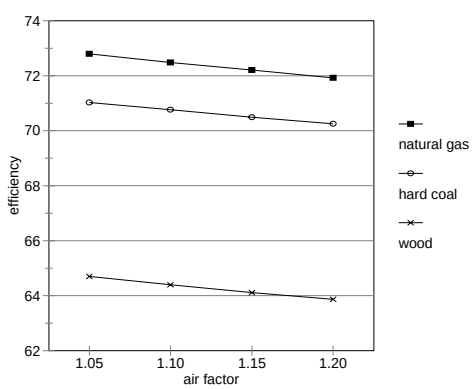

Figure 11 System exergy efficiencies for different fuels; air preheat with full flue gas flow

In the before mentioned cases with air preheat, the preheating temperature is limited till around 300 ˚C, due to the differences in strength of the fluid flows. Higher air preheating temperatures can be obtained when part of the flue gas bypasses the air preheater, in such a way that air flow and flue gas flow passing the air preheater have the same strength. The bypass flow can be cooled in another heater in order to transfer heat to a power cycle or heat absorbing process. Such a system, with splitted flue gas flows, is schematically shown in Figure 8. With this system in theory any desired air preheating temperature can be obtained. The technical feasibility with regard to flow control and the very high preheating temperatures can be questioned, but will not be discussed here. The purpose of this evaluation is just to show the effects of high temperature air preheating. Table 6 presents the results of a number of cases for the combustion of natural gas with preheated air and an air factor of 1.05. Also the case without air preheat is included in this table in order to emphasise the

	units	natural gas				
air factor	-	1.05	1.05	1.05	1.05	1.05
air temp.	˚C	15	300	500	750	1000
ad. comb. temp.	˚C	1983	2120	2153	2425	2604
syst. ex. eff.	%	68.24	73.06	75.10	76.92	78.25
exergy losses						
combustor	%	28.66	22.83	20.46	18.37	16.84
preheater	%	-	1.06	1.39	1.66	1.86
stack	%	3.33	3.34	3.34	3.34	3.34

Table 6 Combustion of natural gas; air preheat with splitted flue gas flow

effect of air preheat. The adiabatic combustion temperature will of course increase due to air preheat and therefore the exergy loss of combustion decreases significantly. The difference between the cases with an air preheat temperature of 1000 ˚C and the cases without preheat is almost 12 %. However, because of the additional loss in the preheater the increase in system exergy efficiency is nearly 10 %.

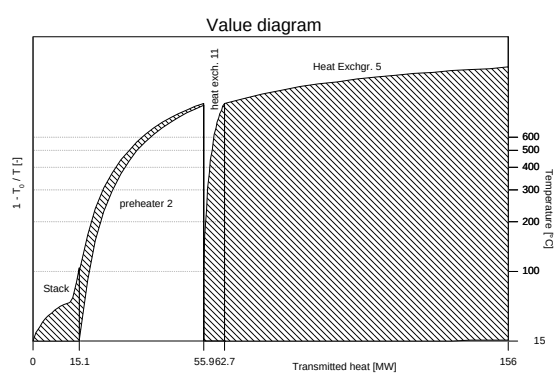

Figure 12 Value diagram, combustion of natural gas with an air preheat temperature of 1000 ˚C

Since the overall exergy loss of the combustion system is about 30 % a loss reduction of 10 % means that the overall loss is reduced by 1/3. Figure 12 shows the value diagram of the natural gas fired case with an air preheat temperature of 1000 ˚C. In the air preheater approximately 40 % of the heat supplied by the fuel must be transferred, while about 7 % is transferred in the bypass heat exchanger nr.11. It will be clear that preheating combustion air at these temperature levels will be very expensive. As shown in Figure 13 air preheating in case of hard coal and wood combustion has more or less the same effect as in case of combusting natural

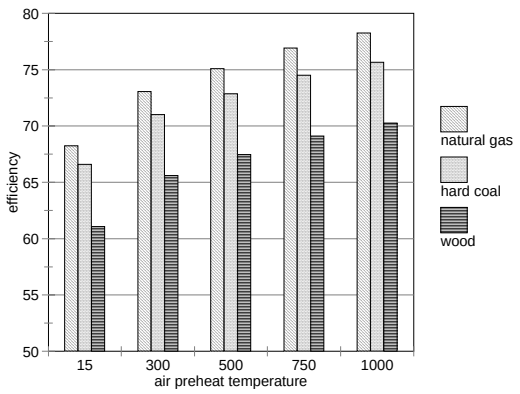

Figure 13 Comparison of different fuels; air preheat with splitted flue gas flow

gas. Differences in system exergy efficiency between the extreme cases are about 9 % instead of 10 % for natural gas. The system exergy efficiencies in Table 6 are determined by using an air factor of 1.05. It has been concluded before that the air factor has only little effect on system efficiency. Preheating combustion air even further reduces the effect of increased air factors. In case of combusting natural gas an increase of the air factor from 1.05 to 1.20 reduces system exergy efficiency from 78.25 % to 77.55 %.

CONCLUSIONS

The thermal combustion of fuel is associated with large exergy losses. These exergy losses depend seriously on the type of fuel. Combustion of hard coal results in a somewhat lower exergy efficiency (66.03 %) than combustion of natural gas (67.74 %), but combustion of wood has a significantly lower efficiency (60.52 %).

The air factor has a limited effect on system exergy efficiency: an increase from 1.05 to 1.20 decreases the efficiency in between 1.6 to 1.8 % (points). Air preheat reduces this effect till below 1 %.

The exergy loss of combustion can be reduced considerably by preheating combustion air. Preheating of air with the full flue gas flow is limited by the difference in strength of air and gas flows. Raising the air factor increases the air temperature. In case of combustion of natural gas the increase in system exergy efficiency is 4.56 % (points) with an air factor of 1.05 and 5.48 % with an air factor of 1.20.

Higher air preheat temperatures can be obtained by using the flue gas flow only partly for preheating air. The remainder of the flue gas flow can be used for heat transfer to a power cycle or heat absorbing process. With air preheat temperatures of 1000 ˚C exergy efficiencies can be increased up to approximately 10 % compared to systems without air preheat.

It is evident that reducing exergy losses of combustion is only useful if the heat transferred from the flue gas can also be utilised at high temperatures. Otherwise a reduction of exergy loss of combustion will only increase the exergy loss of heat transfer to the power cycle or heat absorbing process.

Even with very high air preheat temperatures exergy losses of combustion are still more than 20 %. The application of electrochemical conversion of fuel, as is realised in fuel cells, allows for much lower exergy losses (approx. 5 - 7 %) for the reaction between fuel and air than thermal conversion. For industrial applications electrochemical conversion is not yet available, but will be an interesting option for the future.

REFERENCES

[1] Lier, J.J.C. van, *Bewertung der Energieumwandlung mit dem Exergiebegriff bei der Strom- und/oder Wärmeerzeugung*
Brennstoff Wärme Kraft 30 (1978)
Nr. 12, Dezember, 475-484

[2] Baehr, H.D., *Die exergie von Kohle und Heizöl.*
Brennstoff Wärme Kraft 39 (1987)
Nr. ½ - Januar/Februar, 42-45